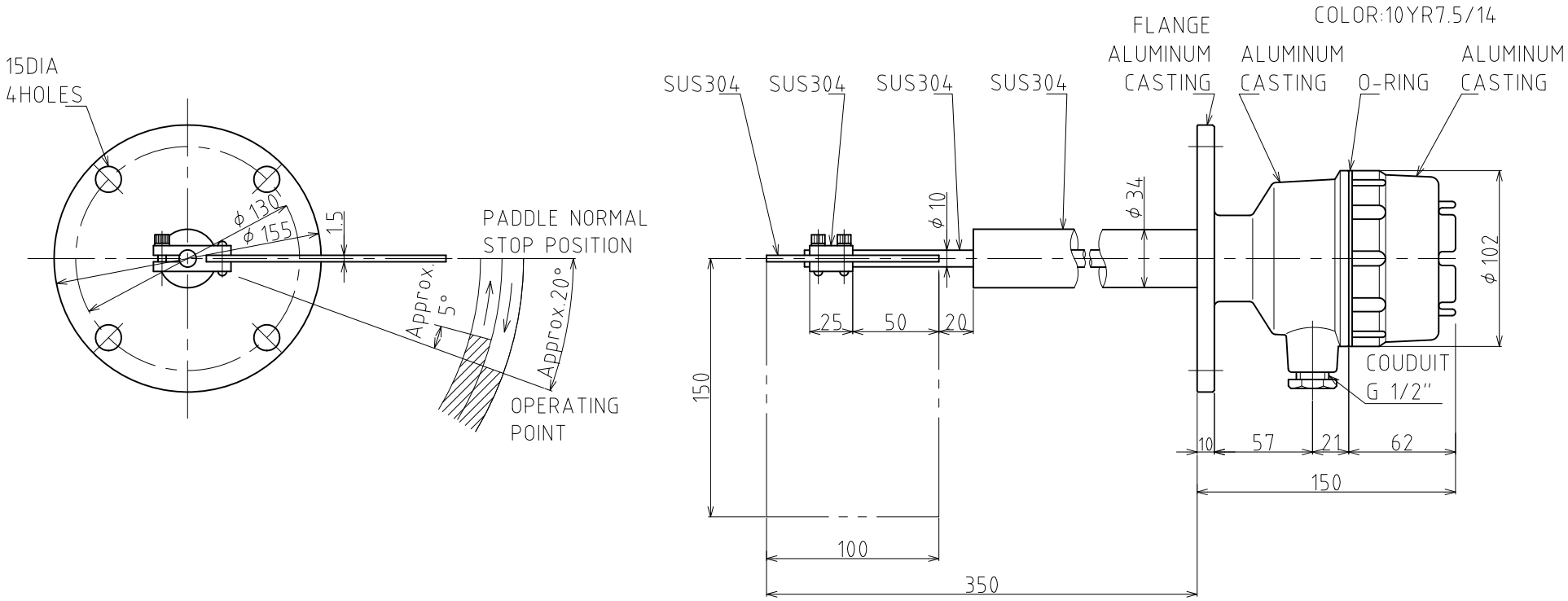

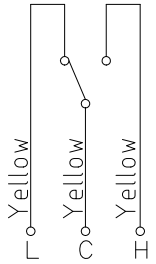

CONTACT CAPACITY AC250V 10A RESISTANCE LOAD

between terminals C and L : ON
between terminals C and H : OFF
between terminals C and L : OFF
between terminals C and H : ON

Q'ty:

図暦 CHANGE NOTICE	承認 APPROVED	検図 CHECKED	製図 DRAWN ohno	clockwise action type	名称 TITLE PAF-1 FLOW SWITCH
	第三角法 THIRD ANGLE PROJECTION	尺度 SCALE 1:2.5	日付 DATE Mar,1,2016	東和制電工業株式会社 TOWA SEIDEN INDUSTRIAL CO., LTD.	図面番号 DRG. No. HY-5431